Not for print

Paper size: A4, size:1399.00 x1603.74 mm

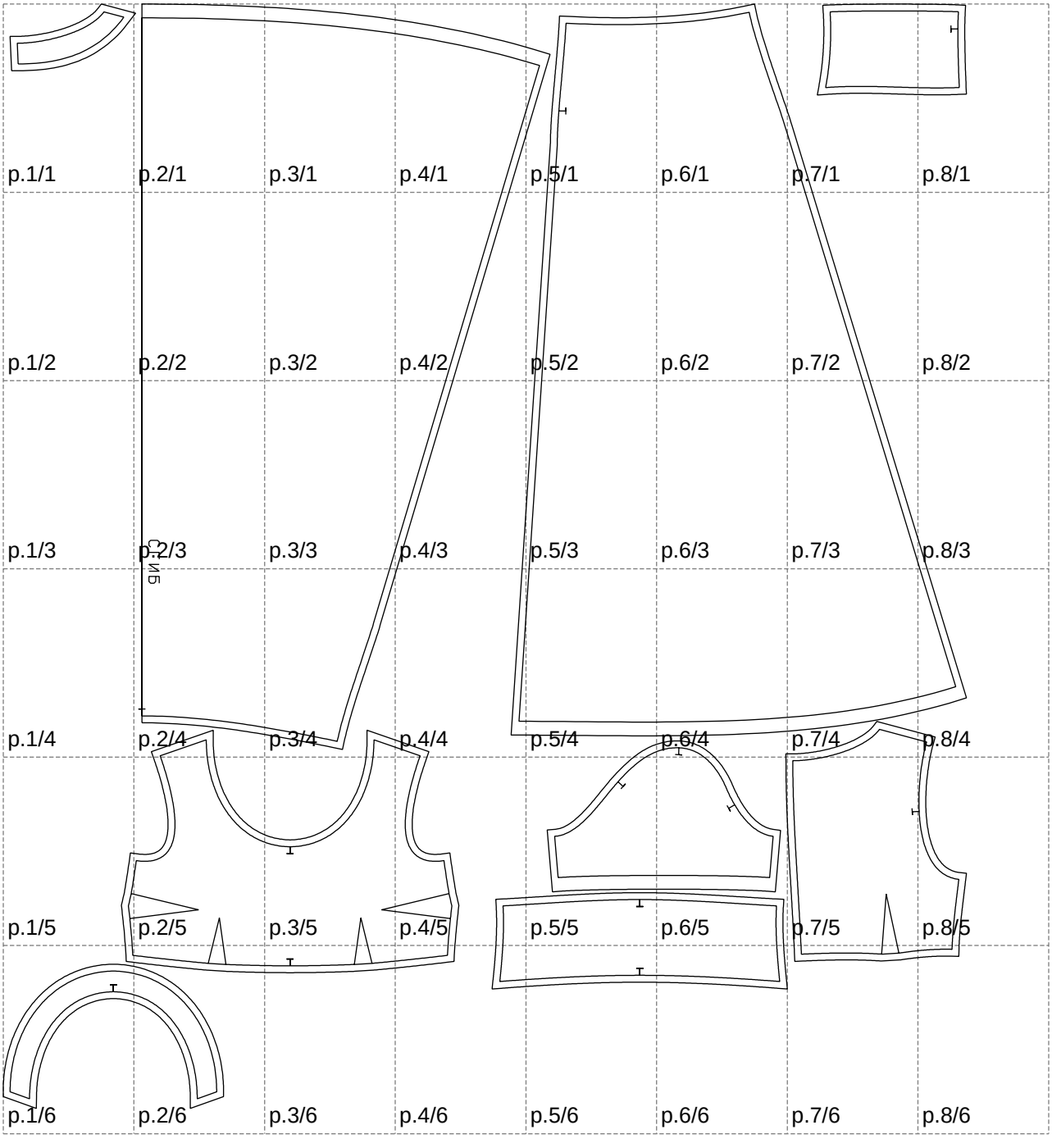

Example

size:1488.94 x2139.13 mm

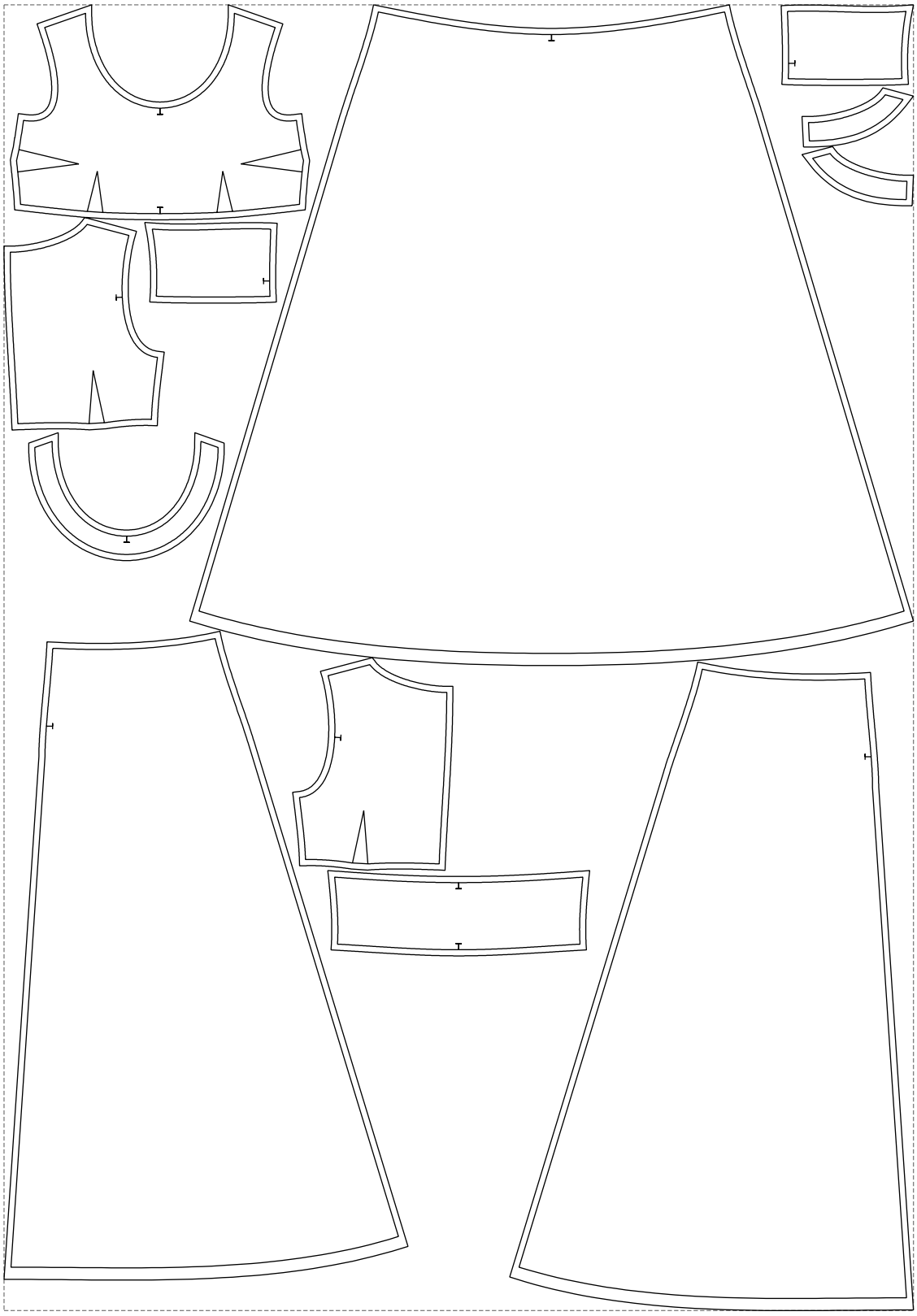

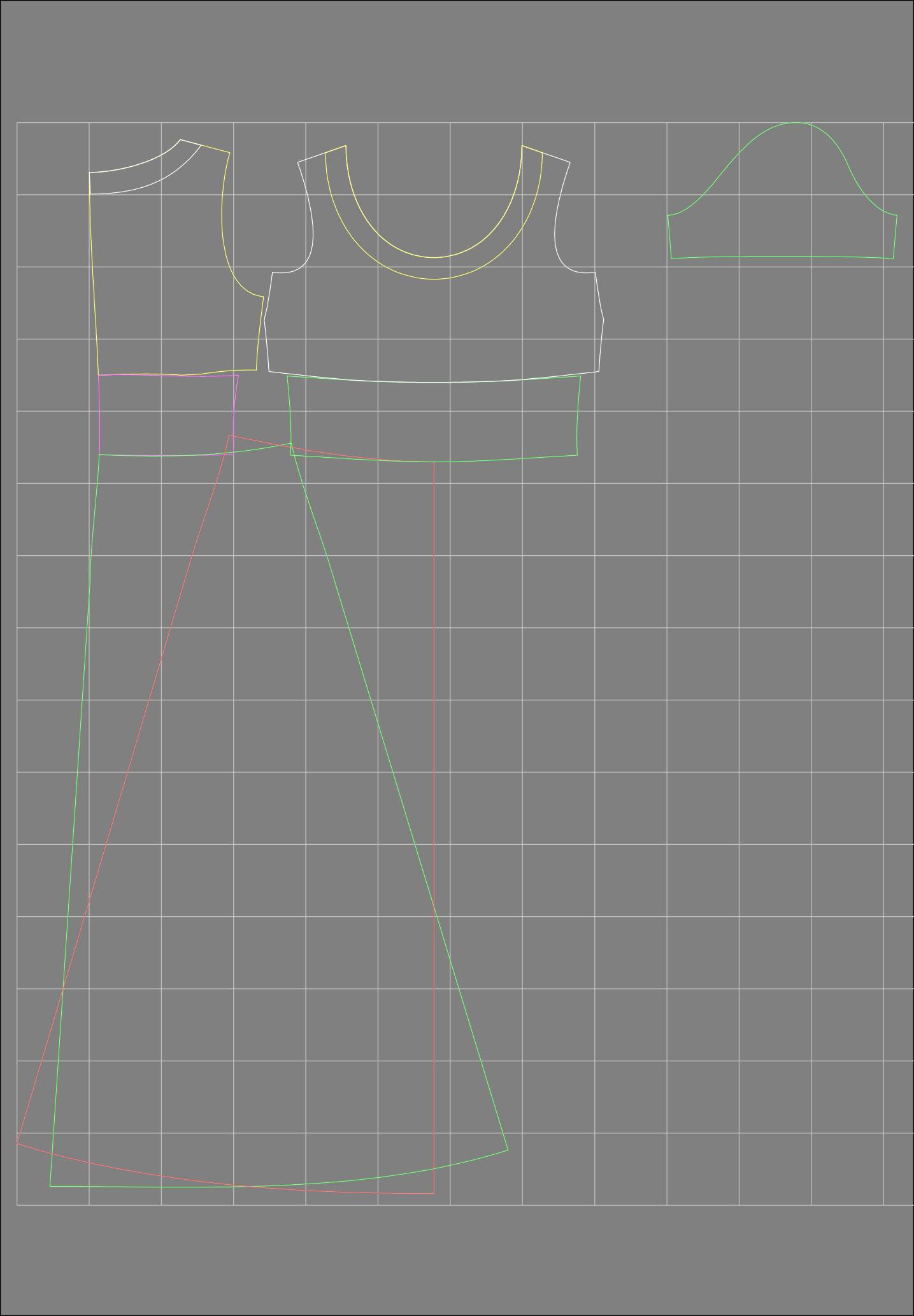

Maneken =1 ver.0

rz_1=170 rz_16=88 rz_17=75.6 rz_18=67.6 rz_19=96 rz_20=94.6

. . . . . .

. . . . . .

. . . . . .