Not for print

Paper size: A4, size:1068.00 x246.80 mm

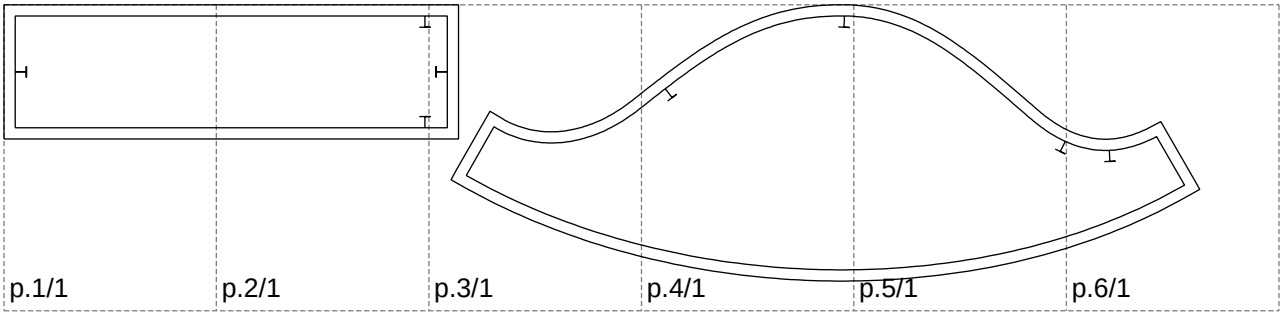

# Example

size:1338.92 x369.88 mm

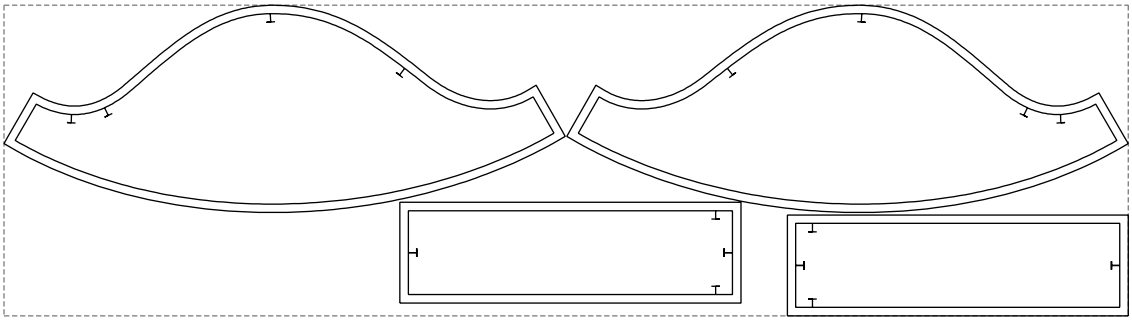

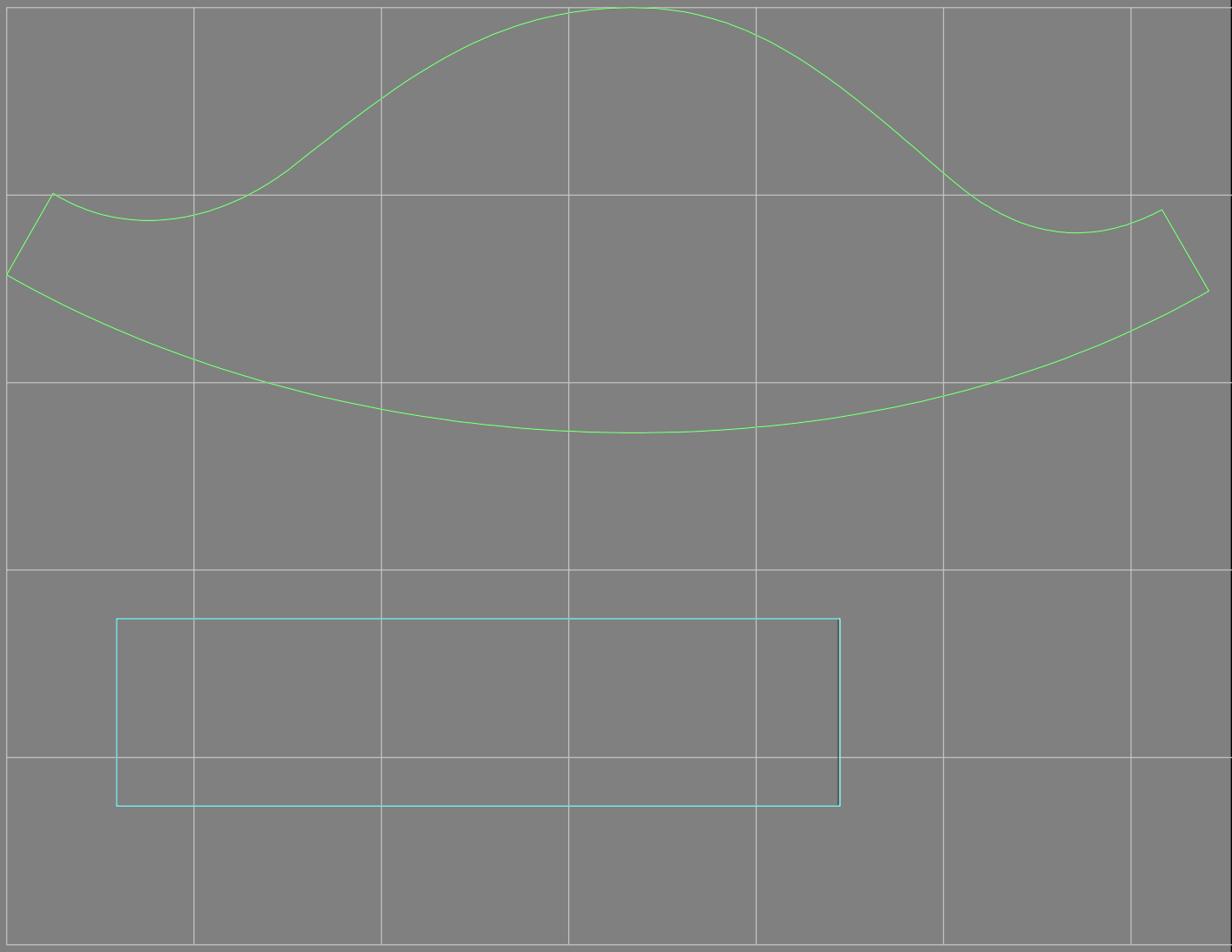

Maneken =1 ver.0

rz_1=170 rz_16=108 rz_17=92.5 rz_18=89.2 rz_19=116 rz_20=113

---

. . . . . .

. . . . . .

. . . . . .